REVISIONS				
ZONE	REV.	DESCRIPTION	DATE	APPROVED
	A	Initial release	28-3-2024	SS

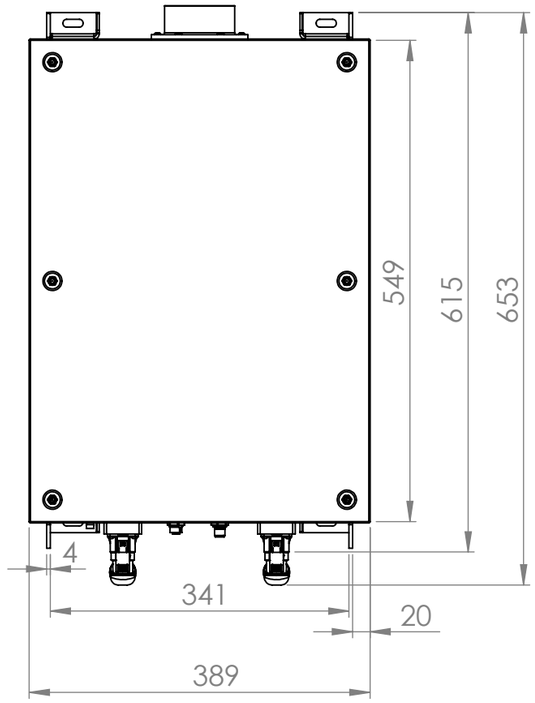

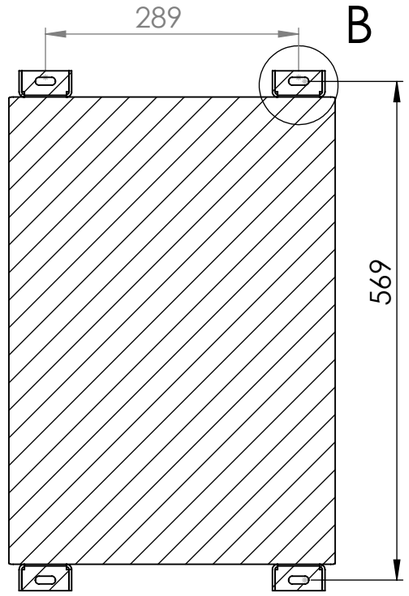

SECTION A-A

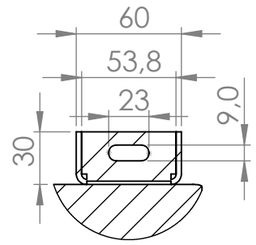

DETAIL B

SCALE 2 : 7

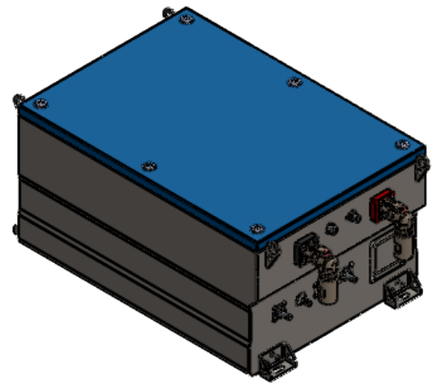

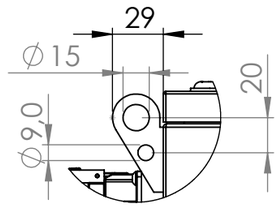

DETAIL C

SCALE 2 : 7

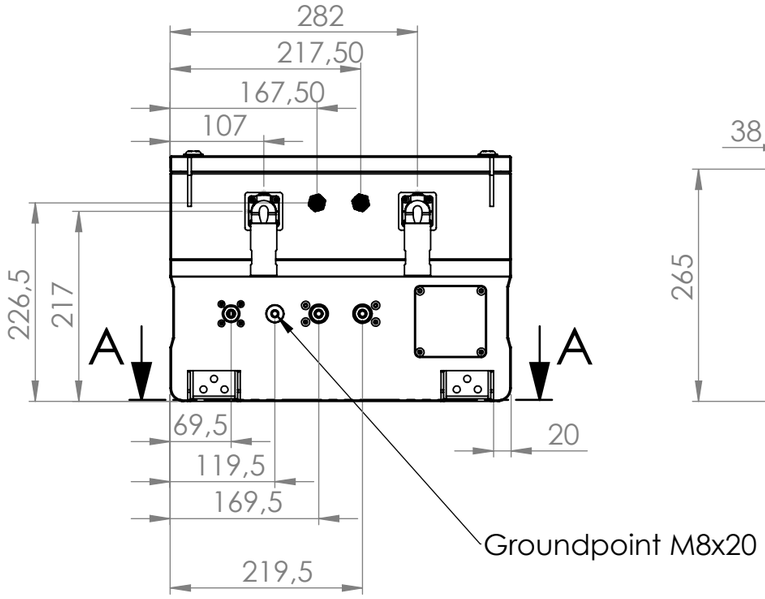

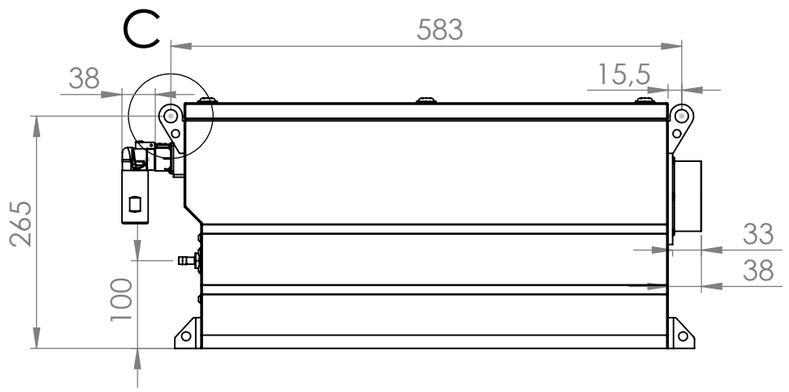

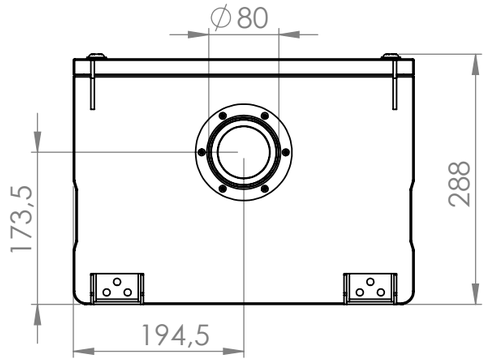

MG ENERGY SYSTEMS
Innovation in energy storage

Foeke Sjoerdswei 3
8914 BH Leeuwarden
T: +31 (0)58-750 89 47
M: +31 (0)6 15 44 33 42

E: Info@mgenergysystems.eu
W: www.mgenergysystems.eu

All drawings are property of MG Energy Systems. Drawings may not be shown, copied or reproduced without approval of MG Energy Systems.

General tolerance according to ISO 2768-mH and ISO 286

over (mm)	0.5	6	30	120	400	1000	2000	0	10	50	120	400
up to (mm)	6	30	120	400	1000	2000	4000	10	50	120	400	-
tolerance (mm, deg)	±0.1	±0.2	±0.3	±0.5	±0.8	±1.2	±2.0	±1°	±0°30'	±0°20'	±0°10'	±0°5'

Angular (length of shorter leg)

Dimensions are in mm, unless otherwise specified

Roughness according to ISO 1302

General tolerance for form and position according to ISO 1101

Drawn by: S.Schat	Date: 28-3-2024	Sheet:	Title:	MG - RS230	Format
Checked by:	Date: 28-3-2024	1 of 1	MG - RS230		A3
Material:	Proj.	Scale:	Part nr.: MG2000151A		Rev.
Weight: g		1:7	Desc.: MG RS230		A